3.13

Pressure reducing valve pilot operated

Type 3DR10P...L6X

Size 10
up to 315 bar
up to 120 L/min

Contents

Function and configuration	02
Ordering code	03
Technical data	03
Characteristic curves	04
Unit dimensions	05

Features

-Porting pattern conforms to DIN 24 340 form A and ISO 4401
-4 pressure ratings
-2 adjustment elements
· Rotary knob
· Adjustable bolt with protective cap
-Pressure gauge fitting

Ordering code

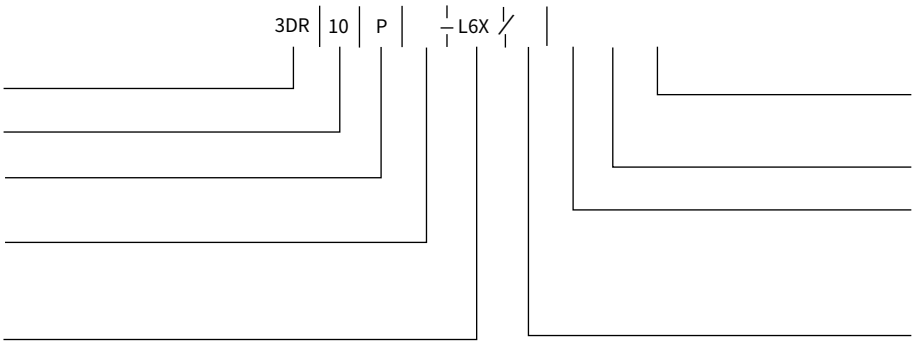

Technical data

Characteristic curves (Measured at ϑ_{oil} =40°C ±5°C , using HLP46)

P_A-Q Characteristic curve

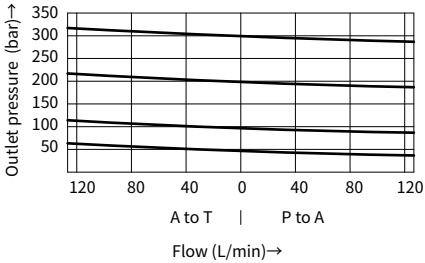

P_{min}-Q characteristic curve

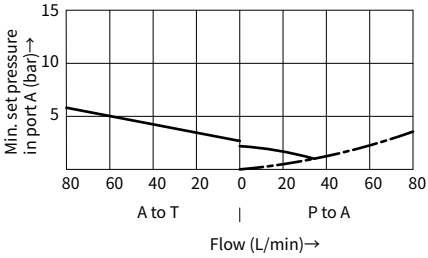

03

ΔP-Q characteristic curve

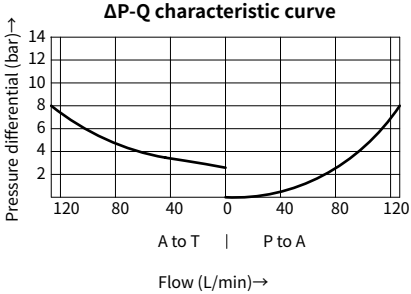

Pilot flow in relation to the main flow

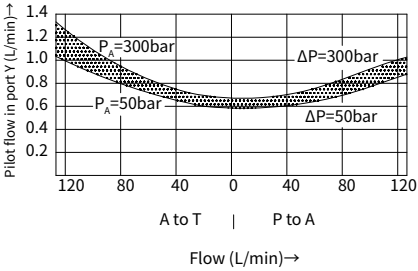

Unit dimensions

(Dimensions in mm)

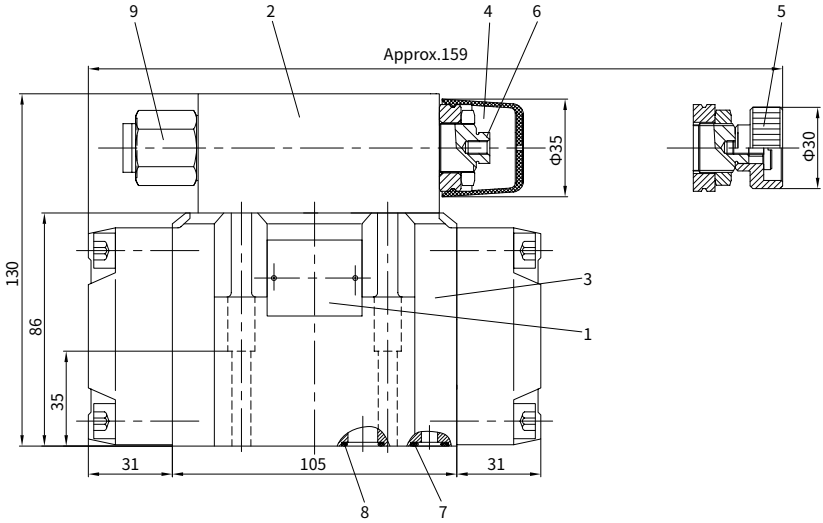

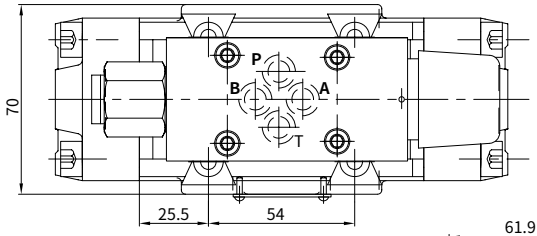

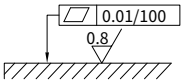

Requirement for mounting surface

1 Name plate
2 Pilot control valve
3 Main valve
4 Adjustment element "5"
5 Adjustment element "4"
6 Internal hexagon screw S=10
7 O-rings 10.82×1.78
(Port X and Y)
8 O-rings 12×2
(Ports A2, B2, P2, TA2 and TB2)
9 Pressure gauge connection G1/4

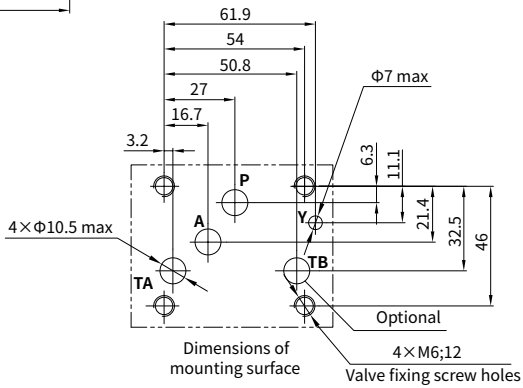

Dimensions of mounting surface

It must be ordered separately, if connection plate is needed.
Type: G535/01(G3/4) G535/02(M27×2)
G536/01(G1) G536/02(M33×2)

Valve fixing screws:
4 pcs GB/T -10.9,
internal hexagon screw
Tightening torque M_A =15.5 Nm